MADE IN THE U.S.A.

JASON HYDROTHERAPY

8328 MacArthur Dr. • North Little Rock, AR 72118
501.771.4477 • Fax: 501.771.2333
Customer Service: 800.255.5766
www.jasoninternational.com

forma® Collection Specifications

HE527

MicroSilk®

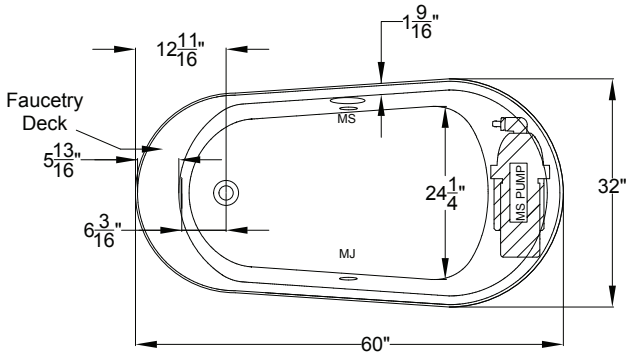

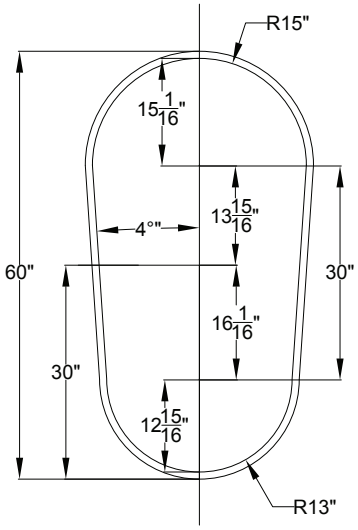

DROP IN HOLE SIZE

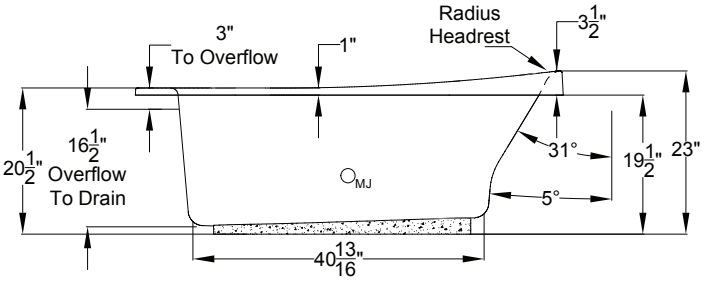

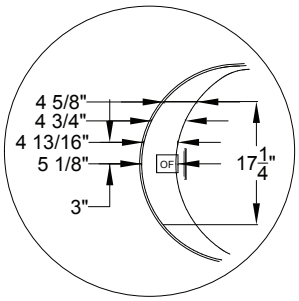

Faucetry Deck
Flat Dimensions

Patents received or pending.

Includes Linear Overflow Drain Assembly

Note: Dimensional Tolerances: ±1/4"

Drop-in-Hole Size:	See Diagram
Operating Capacity:	34 Gal.
Overflow Capacity:	71 Gal.
Floor Loading / sq.ft.	54.9 lbs.
Carton Wt.:	99 lbs.
Cube:	33.7 $ft.^3$

Construction: Fiberglass reinforced acrylic bath with Level Form™ full-support base.

We provide products listed with Intertek ETL SEMKO (Edison Testing Laboratories) U.S. and Canadian and with International Association of Plumbing and Mechanical Officials (IAPMO). Consult factory with your listing requirements.

Standard

A 120V system that includes a MicroSilk® unit, an electronic control, and a 20-minute timer.

Premier

A 120V system that includes a MicroSilk® unit; (2) Chromatherapy mood lights; Automatic Ozone System; an electronic control; and a 20-minute timer.

Signature

A 120V system that includes a MicroSilk® unit; (2) Chromatherapy mood lights; Automatic Ozone System, a digital control with LCD display; low water level and temperature sensors; enhanced user control options, a 20-minute timer; and Bluetooth Sound Immersion System. Control keypad controls the MicroSilk® unit, LED Chromatherapy mood lights, and shows equipment status, water temperature, and time remaining.

Copyright © 2017 Jason International. forma® Collection