# Single-lever sink mixer 1/2"

MODEL # 31492000

Pure Freude an Wasser

GROHE America, Inc | 200 North Gary Avenue, Suite G, Roselle, IL 60172
Phone: +1 (800) 444-7643 | Fax: +1 (800) 225-2778 | us-customerservice@grohe.com

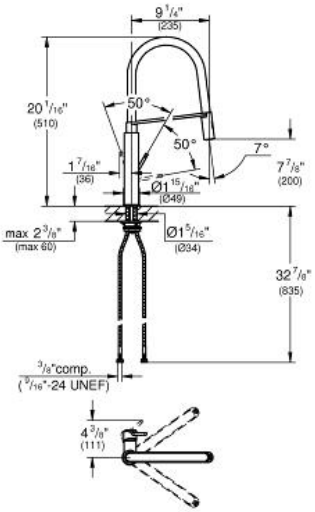


**Product Description:**
**Single-lever sink mixer 1/2"**

**Standard Specification:**
- Single hole installation
- **GROHE StarLight** finish
- **GROHE SilkMove** 28 mm ceramic cartridge
- Professional spray
- Locking Push Button Control - to switch from regular flow to spray
- Swivel spout
- Swivel area 360°
- **Protected against backflow**
- Stainless steel flex lines
- Quick installation system
- Automatic return to aerator
- Max Flow Rate 1.75 gpm

**Color:**
❑ 31492000 000 chrome